SSR02 RS485 protocol

Contents

1 Introduction 3

2 RS485 network physical layer 3

3 Protocol packet description 4
3.1 RS485 address 4
3.2 Function Code 4
3.3 CRC bytes 4
3.4 Packet structure 5
3.4.1 Packet structure reference notes 5
3.4.2 Function code 03H reading from a slave device 6
3.4.3 Function code 10H reading from a slave device 7
3.4.4 Error Exception codes 8
3.4.5 How beam data is stored in a byte for transmission over the RS485 network. 8

1 Introduction

The purpose of this document is to describe how to communicate with the SSR02 over the RS485 connection.

The following sections will describe physical layer of the RS485 communication network and the protocol used for communication with the SSR02.

2 RS485 network physical layer

The SSR02 communicates at a fixed speed of 38400 Baud with one stop bit and no parity bit. The protocol works over a RS485 network with one network master which could be a PC or PLC device for example and with up to 15 pcs SSR02 systems set up as RS485 slave devices on the network.

The bus is a 3 wire bus consisting of signals D1, D0 and ground.

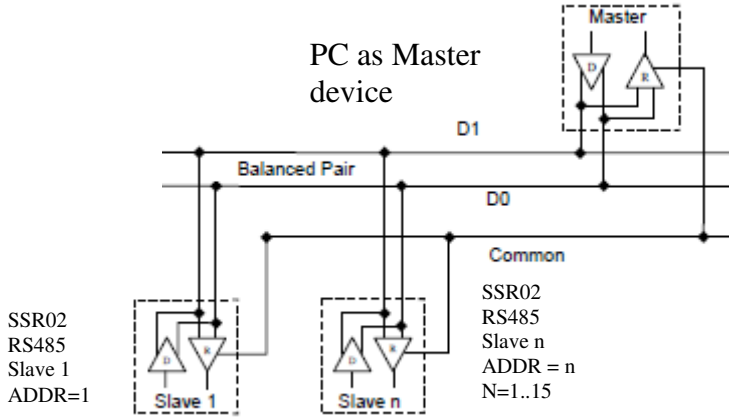

The above network shows a typical RS485 network. In this RS485 network a PC is the RS485 master device and the SSR02 are RS485 slave devices.

Note. Each SSR02 device which is connected to the RS485 network contains a 530 Ohm termination resistor. If you are creating a network with more than 4 pcs SSR02 in it then only the Master device and the last slave device at the end of the RS485 network should contain termination resistors. Otherwise the load on the RS485 bus will be too large. Talk to TELCO Sales for support if you wish to create a RS485 network with more than 4 pcs SSR02 in it.

3 Protocol packet description

The protocol follows the binary MODBUS RTU protocol for use on serial bus networks.

3.1 RS485 address

This is the physical address on the RS485 network. This is set on each SSR02 device on the RS485 network by the PC software which allows the RS485 address to set between 1 and 127. For all of the following sections it will be assumed that the SSR02 is set to RS485 address 01.

Factory default address for the SSR02 RS485 address is 127

3.2 Function Code

This is either a request code from the network master or an answer from a slave device on the RS485 network:

03H = Read command sent from the master to a slave device.
03H = Result sent from a slave device to the master after being polled,

10H = Write command sent from the master to a slave device on the RS485 net,
10H = Response sent from a slave device to the master after being written to.

3.3 CRC bytes

The CRC packet is calculated using the CRC method from MODBUS protocol.
The CRC 16 bit block needs to be calculated for each packet before it is sent and when it is received to make sure it is a valid packet and has not been corrupted..

3.4 Packet structure

The packet structure follows the MODBUS RTU binary format for serial communication.

3.4.1 Packet structure reference notes

Address space	An Address represents one byte but to read or write you have to write a register which is two bytes in size
A Register	A register is 2 bytes of data
Start address	Two bytes representing the MODBUS register at which to begin reading or writing from or to
Byte Count	One byte representing the quantity of bytes being transfered. Each MODBUS register is made up of 2 bytes, so this value would be 2 * N, with N being the quantity of registers being read
Data Byte Pair	2 * N bytes containing the actual bytes being read or written. Presents a register

Note : The maximum size of a MODBUS RTU frame is 256 bytes including address, function code and crc etc.

3.4.2 Function code 03H reading from a slave device

Read request . Master -->> Slave Function code =0x03H

RS485 address	Function code	Start address	Start address	Number of registers to read	Number of registers to read	CRC	CRC
		High byte	Low byte	High byte	Low byte	Low Byte	High byte
1 byte	1byte	1byte	1byte	1byte	1byte	1byte	1byte

Read response . Slave -->> Master Function code =0x03H

			Lowest Byte				Highest byte		
			LS Byte 0	Byte 1	>>> >>>	Byte (x-1)	Byte (x)		
RS485 address	Function code	Byte Count	Data byte pair of n bytes . Byte pair register 00	Data byte pair of n bytes . Byte pair register 00		Data byte pair of n bytes . Byte pair register XX	Data byte pair of n bytes . Byte pair register XX	CRC	CRC
		max = 251 DEC	High byte	Low byte		High byte	Low byte	Low Byte	High byte
1 byte	1byte	1byte	1byte	1byte		1byte	1byte	1byte	1byte

Read response: Error . Slave -->> Master Function code =0x83H = 80H + 03H

RS485 address	Function code	Exception code	CRC	CRC
			Low Byte	High byte
1 byte	1byte	1byte	1byte	1byte

3.4.3 Function code 10H reading from a slave device

Write request . Master -->> slave Function code =0x10H

							Lowest Byte				Highest byte		
							LS Byte 0	Byte 1	>>>	>>>	Byte (x-1)	Byte (x)	
RS485 address	Function code	Start address	Start address	Number registers to write	Number registers to write	Byte Count	Data byte pair of n bytes . Byte pair register 00	Data byte pair of n bytes . Byte pair register 00			Data byte pair of n bytes . Byte pair register XX	Data byte pair of n bytes . Byte pair register XX	CRC	CRC
		High byte	Low byte	High byte	Low byte	max = 251 DEC	High byte	Low byte			High byte	Low byte	Low Byte	High byte
1 byte	1byte	1byte	1byte	1byte	1byte	1byte	1byte	1byte			1byte	1byte	1byte	1byte

Note number of (2 byte) registers (Quantity of Registers) to write in one go is limited from 0x0001 to 0x0079 Hex by the MODBUS protocol

Write response . Slave -->> Master Function code =0x10H

RS485 address	Function code	Start address	Start address	Number registers to written	Number registers to written	CRC	CRC
		High byte	Low byte	High byte	Low byte	Low Byte	High byte
1 byte	1byte	1byte	1byte	1byte	1byte	1byte	1byte

Write response : Error . Slave -->> Master Function code =0x90H = 80H +10H

			CRC	CRC
RS485 address	Function code	Exception code	Low Byte	High byte
1 byte	1byte	1byte	1byte	1byte

3.4.4 Error Exception codes

Code	Name	Function
01	ILLEGAL FUNCTION	Not implemented
02	ILLEGAL DATA ADDRESS	The data address received in the query is not an allowable address for the server (or slave). More specifically, the combination of reference number and transfer length is invalid. For a controller with 100 registers, the PDU addresses the first register as 0, and the last one as 99. If a request is submitted with a starting register address of 96 and a quantity of registers of 4, then this request will successfully operate (address-wise at least) on registers 96, 97, 98, 99. If a request is submitted with a starting register address of 96 and a quantity of registers of 5, then this request will fail with Exception Code 0x02 "Illegal Data Address" since it attempts to operate on registers 96, 97, 98, 99 and 100, and there is no register with address 100.
03	ILLEGAL DATA VALUE	Not implemented
04	SLAVE DEVICE FAILURE	Not implemented
05	Not implemented	Not implemented
06	SLAVE DEVICE BUSY	Not implemented
07	Not implemented	
08	Not implemented	
09	Not implemented	
0A	Not implemented	
0B	Not implemented	
0C	CRC Error	Sent back if the received packaet has a CRC error

3.4.5 How beam data is stored in a byte for transmission over the RS485 network.

This relates to Parallel scan , Up scan, Down scan, or Blanking payload data bytes.

The bytes are ordered : [Header] ,[By0],[By1], [By2]….[Byx], [2x CRC bytes]

For each byte of beam data { Parallel scan , Up scan, Down scan, or Blanking data} :

- The MSB represent the lowest beam number in the byte.
- The LSB represents the highest beam number in the byte.

So at bit level : [Beam 1 , Beam 2, Beam 3, Beam 4, Beam 5, Beam 6, Beam 7, Beam 8]

This is done so that if a whole Parallel scan , Up scan, Down scan is read as an incoming data stream, it runs beam 1,2,3,4,5,6,7,8,9,10....x beams in a continuous stream of sequential bit data.

Note : light curtian & beam data are written and in some cases ignore modbus register rules

Format :

[MODBUS HEADER] @@@ [BY{0},BY{1},BY{2} -- BY{X-1},By{X}] [CRC,CRC]

MODBUS Address space codes

HB.H	Register MSB	Register LSB	Transmission Format of MODBUS DATA Section [BY{0},BY{1},BY{2} -- BY{X-1},By{X}]	Type	Can be written to with function code 0x10 Hex	Can be written to with function code 0x6D Hex	Count in bytes	Notes	Byte position	Reg ister address in dec	Count in registers	Count in bytes	Address Hex
0	My configuration type is	My configuration type is	@@@[MSB , LSB]	System:Status	No	Yes	2		0	0	1	2	0
1	Production YR	Production Month	@@@[MSB , LSB]	System:Status	No	Yes	2		2	1	1	2	1
2	Unused function		@@@[MSB , LSB]	None	No	Yes	2		4	2	1	2	2
3	Unused function		@@@[MSB , LSB]	None	No	Yes	2		6	3	1	2	3
4	Gain setting : 8 bits : Manual level	Gain setting : 8 Bits Auto gain : level	@@@[MSB , LSB]	Settings	Yes	No	2		8	4	1	2	4
5	Unused function		@@@[MSB , LSB]	Settings	Yes	No	2		10	5	1	2	5
6	Unused function		@@@[MSB , LSB]	Settings	Yes	No	2		12	6	1	2	6
7	Unused function		@@@[MSB , LSB]	Settings	Yes	No	2		14	7	1	2	7
8	Unused function		@@@[MSB , LSB]	Settings	Yes	No	2		16	8	1	2	8
9	Set value to force analogue output to (16 bit)		@@@[MSB , LSB]	Settings	Yes	No	2		18	9	1	2	9
A	Input Pin mode select (16 Bit)		@@@[MSB , LSB]	Settings	Yes	No	2		20	10	1	2	A
B	Analogue op mode : 8 bits : control input high	Analogue op mode : 8 bits : control input low	@@@[MSB , LSB]	Settings	Yes	No	2		22	11	1	2	B
C	Channel 1 mode (16 bit)		@@@[MSB , LSB]	Settings	Yes	No	2		24	12	1	2	C
D	Channel 2 mode (16 bit)		@@@[MSB , LSB]	Settings	Yes	No	2		26	13	1	2	D
E	Channel 3 mode (16 bit)		@@@[MSB , LSB]	Settings	Yes	No	2		28	14	1	2	E
F	Channel 4 mode (16 bit)		@@@[MSB , LSB]	Settings	Yes	No	2		30	15	1	2	F
10	Channel 1 trigger level (16 bit)		@@@[MSB , LSB]	Settings	Yes	No	2		32	16	1	2	10
11	Channel 2 trigger level (16 bit)		@@@[MSB , LSB]	Settings	Yes	No	2		34	17	1	2	11
12	Channel 3 trigger level (16 bit)		@@@[MSB , LSB]	Settings	Yes	No	2		36	18	1	2	12
13	Channel 4 trigger level (16 bit)		@@@[MSB , LSB]	Settings	Yes	No	2		38	19	1	2	13
14	Hystersis level 8 bits	Scan mode (8 bits)	@@@[MSB , LSB]	Settings	Yes	No	2		40	20	1	2	14
15	Curtian settings (64 bit) [Transmitted as a whole 64 bit number :.		@@@[BY{7},BY{6},BY{5},BY{6},->-,BY{0}]	Settings	Yes	No	8	**See Description of MODBUS registers**	42	21	4	8	15
19	RS485 address (16bits) Default value 127 decimal		@@@[MSB , LSB]	Settings	Yes	No	2		50	25	1	2	19
1A	Minimum Coherent area size		@@@[MSB , LSB]	Settings	Yes	No	2		52	26	1	2	1A
1B	Unused function			None	No	Yes	16		54	27	8	16	1B
23	Unused function			None	Yes	No	16		70	35	8	16	23
2B	Unused function			None	Yes	No	16		86	43	8	16	2B
33	Blank space			none	Yes	No	256	Empty space	102	51	128	256	33
B3	Beam Blanking data		@@@[BY{0},BY[1},BY{2},BY{3},->-,BY{x}]	Settings	Yes	No	48	**See Description of MODBUS registers**	358	179	24	48	B3
CB	Blank space			none	Yes	No	96	Empty space	406	203	48	96	CB
FB	RX rail status (16 bit)		@@@[MSB , LSB]	Status : Read Only	No	No	2	**See Description of MODBUS registers**	502	251	1	2	FB
FC	Number of Physical straight beams in system		@@@[MSB , LSB]	Status : Read Only	No	No	2	Output	504	252	1	2	FC
FD	blank space		@@@[MSB , LSB]	Status : Read Only	No	No	2	Output	506	253	16	32	FD
10D	Output Scan data Parrel beam		@@@[BY{0},BY[1},BY{2},BY{3},->-,BY{x}]	Status : Read Only	No	No	48	**See Description of MODBUS registers**	538	269	24	48	10D
125	Output Scan data cross beam down scan		@@@[BY{0},BY[1},BY{2},BY{3},->-,BY{x}]	Status : Read Only	No	No	48	**See Description of MODBUS registers**	586	293	24	48	125
13D	Output Scan data cross beam up scan		@@@[BY{0},BY[1},BY{2},BY{3},->-,BY{x}]	Status : Read Only	No	No	48	**See Description of MODBUS registers**	634	317	24	48	13D
155	FBB : First Beam Blocked. The location of the first blocked beam.		@@@[MSB , LSB]	Status : Read Only	No	No	2	Output	682	341	1	2	155
156	FBM : First Beam Made. The location of the first made(unblocked) beam.		@@@[MSB , LSB]	Status : Read Only	No	No	2	Output	684	342	1	2	156
157	LBB : Last Beam Blocked. The location of the last blocked beam.		@@@[MSB , LSB]	Status : Read Only	No	No	2	Output	686	343	1	2	157
158	LBM : Last Beam Made. The location of the last made beam.		@@@[MSB , LSB]	Status : Read Only	No	No	2	Output	688	344	1	2	158
159	MBB : Middle Beam Blocked. The location of the beam midway between the first and last blocked beams.		@@@[MSB , LSB]	Status : Read Only	No	No	2	Output	690	345	1	2	159
15A	TBB : Total Beams Blocked. The total number of blocked beams.		@@@[MSB , LSB]	Status : Read Only	No	No	2	Output	692	346	1	2	15A
15B	TBM : Total Beams Made. The number of beams made.		@@@[MSB , LSB]	Status : Read Only	No	No	2	Output	694	347	1	2	15B
15C	CBB : Contiguous Beams Blocked. The largest number of		@@@[MSB , LSB]	Status : Read Only	No	No	2	Output	696	348	1	2	15C
15D	CBM : Contiguous Beams Made. The largest number of consecutively made beams.		@@@[MSB , LSB]	Status : Read Only	No	No	2	Output	698	349	1	2	15D
15E	TRN : Number of transitions. The number of transitions from blocked to free and from free to blocked beams is calculated. The transition made can be used for counting objects within the light barrier.		@@@[MSB , LSB]	Status : Read Only	No	No	2	Output	700	350	1	2	15E
15F	OD :Outside dimensions, i.e. number of blocked beam from top blocked beam to bottom blocked beam		@@@[MSB , LSB]	Status : Read Only	No	No	2	Output	702	351	1	2	15F
160	ID : Inside dimension, size of hole in solid object, i.e. the number of made beams from the first blocked beam to the last blocked beam.		@@@[MSB , LSB]	Status : Read Only	No	No	2	Output	704	352	1	2	160
161	CFBB: Contiguous First Beam Blocked, the location of the first blocked beam in the largestgroup of adjacent blocked beams.		@@@[MSB , LSB]	Status : Read Only	No	No	2	Output	706	353	1	2	161
162	CLBB: Contiguous last Beam Blocked		@@@[MSB , LSB]	Status : Read Only	No	No	2	Output	708	354	1	2	162
163	Unused function		@@@[MSB , LSB]	Status : Read Only	No	No	2	Output	710	355	1	2	163
164	Unused function		@@@[MSB , LSB]	Status : Read Only	No	No	2	Output	712	356	1	2	164
165	Unused function		@@@[MSB , LSB]	Status : Read Only	No	No	2	Output	714	357	1	2	165
166	Unused function		@@@[MSB , LSB]	Status : Read Only	No	No	2	Output	716	358	1	2	166
167	ANAL: Analogue Output value in beams		@@@[MSB , LSB]	Status : Read Only	No	No	2	Output	718	359	1	2	167
168	AAB: Any Beam Blocked		@@@[MSB , LSB]	Status : Read Only	No	No	3	Output	720	360	1	2	168
169	CTM: Cycle time measurment		@@@[MSB , LSB]	Status : Read Only	No	No	3	Output	722	361	1	2	169

Description of individual MODBUS setting registers

RX rail status

Description	bits position	bits Data	bits CRC	**Byte**	Notes
Digital Output 1	0	1		LS Byte	
Digital Output 2	1	1		LS Byte	
RX/TX sync fail	2	1		LS Byte	
Alarm . Signal low	3	1		LS Byte	
Vcc error. Vcc too low	4	1		LS Byte	
Digital Output 3	5	1		LS Byte	
Digital input 1	6	1		LS Byte	
Digital Output 4	7	1		LS Byte	
Debug codes from RX rail.	8 - 15	8		MS Byte	Result displays on the status message page if greater than zero

Curtian settings

Bit settings	**Modbus Register position**	bit no	
Gain mode . Manual or Auto gain (Auto gain = 1)	0x0018 LSB B0	0	
Dark mode or light mode (Light mode = 1)	0x0018 LSB B1	1	
Reserved	0x0018 LSB B2	2	
Output 1 processing enabled	0x0018 LSB B3	3	
Reserved	0x0018 LSB B4	4	
Reserved	0x0018 LSB B5	5	
Output 1 forced	0x0018 LSB B6	6	
Output 1 forced high low	0x0018 LSB B7	7	
Output 2 processing enabled	0x0018 MSB B0	8	
Reserved	0x0018 MSB B1	9	
Reserved	0x0018 MSB B2	10	
Output 2 forced	0x0018 MSB B3	11	
Output 2 forced high low	0x0018 MSB B4	12	
Output 3 processing enabled	0x0018 MSB B5	13	
Reserved	0x0018 MSB B6	14	
Reserved	0x0017 MSB B7	15	
Output 3 forced	0x0017 LSB B0	16	
Output 3 forced high low	0x0017 LSB B1	17	
Output 4 processing enabled	0x0017 LSB B2	18	
Reserved	0x0017 LSB B3	19	
Reserved	0x0017 LSB B4	20	
Output 4 forced	0x0017 LSB B5	21	
Output 4 forced high low	0x0017 LSB B6	22	
Reserved	0x0017 LSB B7	23	
Analogue output enabled	0x0017 MSB B0	24	
Analogue output current mode (1) or voltage mode (0)	0x0017 MSB B1	25	
Analogue output forced to a set value defined by the 16 bit value in [Set value to force analogue output to (16 bit)]	0x0017 MSB B2	26	
Reserved	0x0017 MSB B3	27	
Reserved	0x0017 MSB B4	28	
Measure blanking data (zero if read . Can only be set)	0x0017 MSB B5	29	
Hole_detection__Invert_beam_data	0x0017 MSB B6	30	
Reserved	0x0017 MSB B7	31	
Reserved	0x0016 LSB B0	32	
Measured data updated (zero if read . Can only be set)	0x0016 LSB B1	33	
Inversed display format	0x0016LSB B2	34	
Save settings to eeprom (0: Save settings, 1: Don't save settings)	0x0016LSB B3	35	

Digital Outputs format (16 bits) : Channel x mode (16 bit) and Channel x alarm level (16 bit)

Highbyte	**ID Name**	**Description**
0	**DIS**	**Output not active**
1	FBB	First Beam Blocked. The location of the first blocked beam.
2	FBM	First Beam Made. The location of the first made(unblocked) beam.
3	LBB	Last Beam Blocked. The location of the last blocked beam.
4	LBM	Last Beam Made. The location of the last made beam.
5	MBB	Middle Beam Blocked. The location of the beam midway between the first and last blocked beams.
6	TBB	Total Beams Blocked. The total number of blocked beams.
7	TBM	Total Beams Made. The number of beams made.
8	CBB	Contiguous Beams Blocked. The largest number of consecutively blocked beams.
9	CBM	Contiguous Beams Made. The largest number of consecutively made beams.
A	TRN	Number of transitions. The number of transitions from blocked to free and from free to blocked beams is calculated. The transition made can be used for counting objects within the light barrier.
B	OD	Outside dimensions, i.e. number of blocked beam from top blocked beam to bottom blocked beam
C	ID	Inside dimension, size of hole in solid object, i.e. the number of made beams from the first blocked beam to the last blocked beam.
D	CFBB	Contiguous First Beam Blocked, the location of the first blocked beam in the largestgroup of adjacent blocked beams.
E	CLBB	Contiguous last Beam Blocked
F	ABB	Any beam broken
10	MAR0	Use Macro 0
11	MAR1	Use Macro 1
12	MAR2	Use Macro 2
13	MAR3	Use Macro 3

Low byte	**Boolean Operator**
0	Nothing
1	>
2	<
3	>=
4	<=
5	=

Channel x mode (16 bit) = high byte : Low Byte . Channel x alarm level = setting level value

Example : ch1 ,, FBB > 30 ; Channel 1 mode (16 bit) = 0x00 : 0x01 . Channel 1 alarm level = 0x001E

Scan Mode Table

Value	**ID Name**	**Description**
0001h	PAR	Parrell scan mode
0002h	CROSS	Cross Beam scan

Output Data packets

Description	bits Header	bits Data	bits CRC	**Total 16 bit words**	Notes
Data . Sent in the format [BY{0},BY[1],BY{2},BY{3},->-,BY{x}]		1150		72	Reports the status of each channel including blanking if it is present

Blanking settings

Description			**bits Header**	**bits Data**	**bits CRC**
Blanking data :Sent in the format [BY{0},BY[1],BY{2},BY{3},->-,BY{x}]		1150		72	Read blanking reports the status of each channel regard less of if blanking is present or not

Digital Input 1 : selection of analogue output function selection. How the 16 bit word [Analogue scan mode (16 bit)] is defined

High byte	**ID Name**	**Description for when digital input 1 is high the analog output display the following output as define by the setting below**
0	**DIS**	**Output not active**
1	FBB	First Beam Blocked. The location of the first blocked beam.
2	FBM	First Beam Made. The location of the first made(unblocked) beam.
3	LBB	Last Beam Blocked. The location of the last blocked beam.
4	LBM	Last Beam Made. The location of the last made beam.
5	MBB	Middle Beam Blocked. The location of the beam midway between the first and last blocked beams.
6	TBB	Total Beams Blocked. The total number of blocked beams.
7	TBM	Total Beams Made. The number of beams made.
8	CBB	Contiguous Beams Blocked. The largest number of consecutively blocked beams.
9	CBM	Contiguous Beams Made. The largest number of consecutively made beams.
A	TRN	Number of transitions. The number of transitions from blocked to free and from free to blocked beams is calculated. The transition made can be used for counting objects within the light barrier.
B	OD	Outside dimensions, i.e. number of blocked beam from top blocked beam to bottom blocked beam
C	ID	Inside dimension, size of hole in solid object, i.e. the number of made beams from the first blocked beam to the last blocked beam.
D	CFBB	Contiguous First Beam Blocked, the location of the first blocked beam in the largestgroup of adjacent blocked beams.
E	CLBB	Contiguous last Beam Blocked

Low byte	**ID Name**	**Description for when digital input 1 is low the analog output display the following output as define by the setting below**
0	**DIS**	**Output not active**
1	FBB	First Beam Blocked. The location of the first blocked beam.
2	FBM	First Beam Made. The location of the first made(unblocked) beam.
3	LBB	Last Beam Blocked. The location of the last blocked beam.
4	LBM	Last Beam Made. The location of the last made beam.
5	MBB	Middle Beam Blocked. The location of the beam midway between the first and last blocked beams.
6	TBB	Total Beams Blocked. The total number of blocked beams.
7	TBM	Total Beams Made. The number of beams made.
8	CBB	Contiguous Beams Blocked. The largest number of consecutively blocked beams.
9	CBM	Contiguous Beams Made. The largest number of consecutively made beams.
A	TRN	Number of transitions. The number of transitions from blocked to free and from free to blocked beams is calculated. The transition made can be used for counting objects within the light barrier.
B	OD	Outside dimensions, i.e. number of blocked beam from top blocked beam to bottom blocked beam
C	ID	Inside dimension, size of hole in solid object, i.e. the number of made beams from the first blocked beam to the last blocked beam.
D	CFBB	Contiguous First Beam Blocked, the location of the first blocked beam in the largestgroup of adjacent blocked beams.
E	CLBB	Contiguous last Beam Blocked